DALLMER

# balcony grating SEN 15, 150 x 150 mm

Part number: 500311
GTIN: 4001636500311
Rebate group: 3

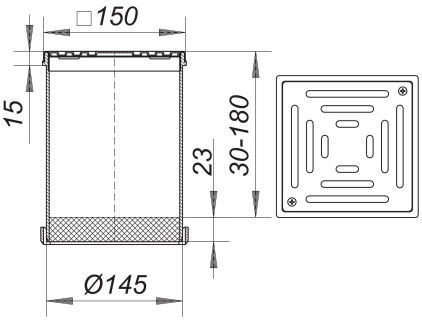


## Description:

balcony grating SEN 15, 150 x 150 mm
used with roof drain types 62, 64 and raising piece types 630

material:
polypropylene
frame 304 stainless steel, 150 x 150 mm, grate 304 stainless steel, secured, load class K 3 (300 kg)
We can supply a wide variety of gratings for use on balconies. Please tell us what you need and we can advise the correct type.

## Spare parts:

590084 support ring, white

Dallmer GmbH + Co KG · Wiebelsheidestraße 25 · 59757 Arnsberg · Tel.: +49 2932 9616-0 · Fax: +49 2932 9616-222
www.dallmer.com · info@dallmer.de
Subject to modifications due to technical development, errors and misprints